FEMALE END VIEW	PANEL CUT-OUT
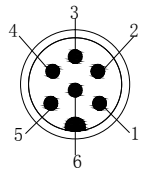	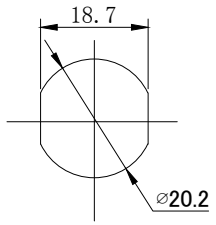

1.BN
2.WH
3.BU
4.BK
5.GY
6.PK

SPECIFICATIONS	
CONTANCT CARRIER MATERIAL/COLOR	PA6/BLACK
CONTACT MATERIAL/PLATING	BRASS/GOLD
COUPLING NUT MATERIAL/PLATING	BRASS/NICKEL
RATED CURRENT	7A
RATED VOLTAGE	300V
CONDUCTOR INSULATION MATERIAL	PVC
NUMBER OF CONDUCTORS	6X18AWG
TEMPERATURE RANGE	-40°C — +85°C
PROTECTION CLASS	IEC IP67

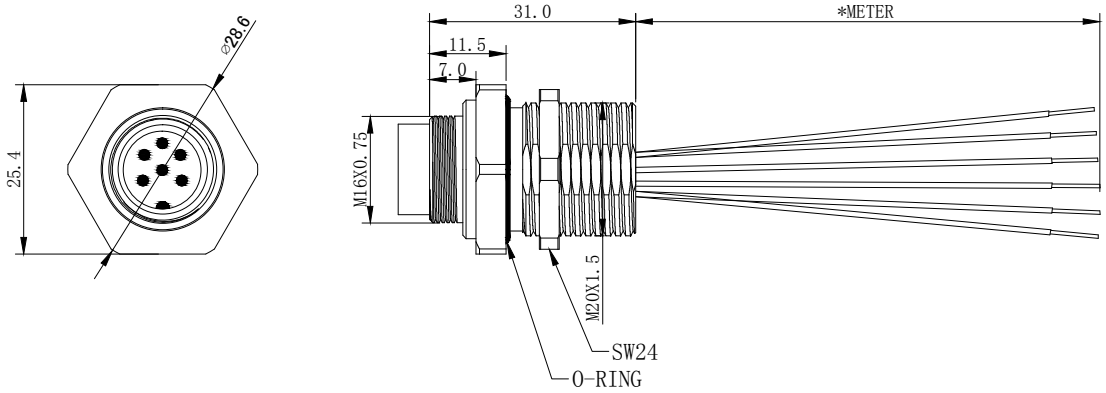

REV	COUNT	DESCRIPTION OF REVISIONS	BY	CHECKED	DATE

UNIT OF MEASUREMENT
MILLIMETER

Tianjin Geneuo Technology Co.,Ltd

Approved:
Date:

Date: 2019.3.18

Description:
FDWZ6-62-x/M20

Process:
Date:

Scale: 1:1

Checked:
Date:

3RD Angle Projection

www.gsee-tech.cn
www.gsee-tech.com

REV
A

Designed: ZL
Date: 2019.4.9

SOURCE DRAWING-FOR REFERENCE ONLY